Hillmar
Hillmar Industries Ltd.
7371 Vantage Way
Delta, BC V4G 1C9
P:604 946-7115 F:604 946-0329
info@hillmar.com www.hillmar.com

HYD PWR UNIT 04-DBQSS4EN
HPT04-DBQSS4EN-MB1V3-150MPR5
SPECIFICATION SHEET
SLS & MKTG
ENGLISH

Sheet Number:	
Job Number:	
Form Number:	129-519-75783PT

Company / Project Reference:	Date.:	Page.:	Document Package No.:	Rev.:
		1 OF 1		

Inventor Drawing

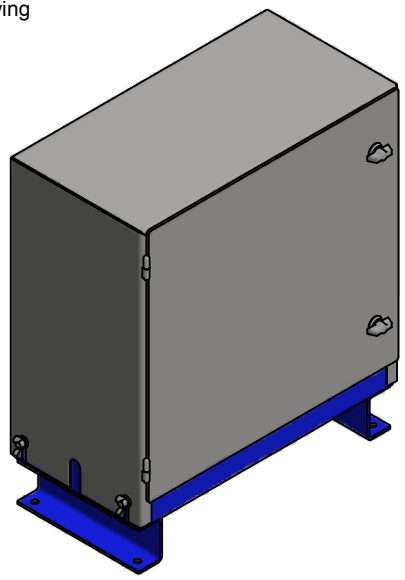

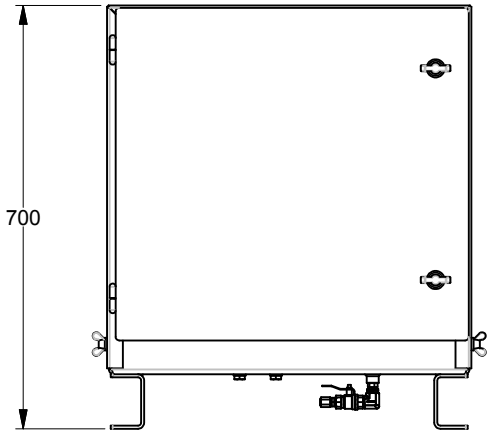

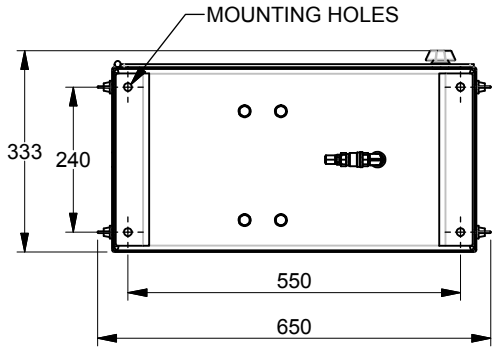

FEATURE	CODE
Hydraulic power unit	HPT
Oil volume	04
Quayside	DBQS
Enclosure SS304	S4EN
Manifold	MB1V3
Motor - pump	150MPR5

Example for ordering
HPT04-DBQSS4EN-MB1V3-150MPR5

TECHNICAL DATA

Motor size (kW)	1.5
Oil volume (L)	4
Maximum pressure (MPa)	15.4
Nominal flow 50/60 Hz (l/min)	5.5/6.6
Hydraulic fittings (oil supply) T1	-4 37° JIC
Mounting holes	4 x Ø13
Mounting bolts	4 x M12
Weight w/o oil (kg)	70

NOMINAL SPECIFICATION

Die cast reservoir.

Stainless steel enclosure.

Gear pump and high-pressure outlet filter.

Circuit manifold having check-valve, relief valve, normally open solenoid valve with manual override, pressure gauge with isolation valve, flow control, motor cut-out pressure switch, accumulator with flow control valve.

Control voltage electrical junction box connection to be drilled to suit requirements by customer.

For electrical motor junction box connection see motor specification sheet for details.

NOTES

Hillmar power units can be customized to suit customer's special requirements

All figures are nominal figures only

All dimensions are in millimeters

Document Template #710-101-62058

** ALL TECHNICAL DATA IS SUBJECT TO CHANGE WITHOUT NOTICE **
Hillmar works have a fully registered ISO 9001-2008 quality assurance programme (QCB #01-1525)

C:\TEMP\74340d01-d00e-4f65-b1f1-b238965ec713\800005217 63\HILLMAR\HILLMAR PRODUCTION\01 HYD PWR UNIT\0700-1\07001006 HPT-QS\SPC-SHT-HPT-QS\129-519-75783 HPT04-DBQSS4EN-MB1V3-150MPR5.idw